CILAMCE2014
XXXV IBERIAN LATIN AMERICAN CONGRESS
ON COMPUTATIONAL METHODS IN ENGINEERING
FORTALEZA - CEARÁ - BRAZIL | NOVEMBER 23-26, 2014

# A FINITE ELEMENT MODEL FOR FLEXIBLE RISER TENSILE ARMOUR BENDING

**Marcelo Caire**[1]

**Nicolau Antonio dos Santos Rizzo**[2]

marcelo.caire@sintefbrasil.org.br

nicolau.rizzo@petrobras.com.br

[1]Instituto SINTEF do Brasil (ISdB), Department of Marine Technology

Rua Bambina, 126, 22251-050, Botafogo, Rio de Janeiro-RJ, Brazil

[2]PETROBRAS – E&P

Rio de Janeiro-RJ, Brazil

**Anderson Barata Custódio**[3]

andersonbc@petrobras.com.br

[3]PETROBRAS/CENPES

Rio de Janeiro-RJ, Brazil

***Abstract.*** *Flexible risers are extensively used in the offshore industry to transport fluids and gas between platforms and the seabed. They are composite structures highly compliant in bending but stiff in response to internal and external pressure, tension and torque. While the axisymmetric riser structural response has been widely investigated and models validated, for the bending behavior some uncertainties still remain. Its behavior is governed by interlayer friction mechanisms, leading to a hysteretic non-linear moment x curvature relationship that is highly dependent on the internal pressure and interlayer friction behavior. A finite element model methodology is proposed and implemented using the general finite element package ABAQUS. The hysteretic bending response is then compared to available experimental data of a 2.5" flexible riser cross section.*

***Keywords:*** *flexible risers, finite element, tensile armor, bending hysteresis*

# 1 INTRODUCTION

Unbonded flexible risers are complex multilayered structures widely used in offshore application as compliant risers in floating production systems (FPS) and as subsea flowlines, providing fluid and gas transport. They are increasingly being deployed in ultra deepwater environments, where a cost effective solution is essential for field development. As pointed out by Saevik (2011), in the last years a lot of research focus has been put on the problem of corrosion fatigue caused by diffusion of gases into the pipe annulus or by sea water ingress in a damaged outer sheath. The consequence is that the cut-off level for fatigue calculations is reduced. In this scenario, the structural design and lifetime evaluation methodologies become critical factors as the accepted conservatism shall be gradually decreased. Due to its very complex behavior and numerical analysis uncertainties associated to it, the manufactures and operators still do not completely rely on those results and are constrained to perform extensive full-scale qualification tests. Figure 1.1 shows the cross section of a typical unbonded riser used in offshore applications.

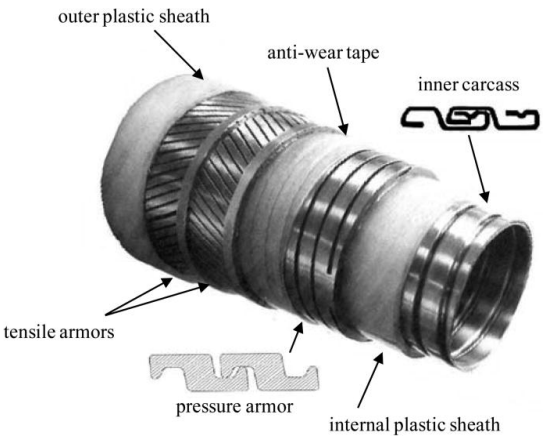


Figure 1.1 – Layer structure of a typical unbonded flexible pipe

Each layer has a particular function to withstand the offshore dynamic loading conditions. Internal and external plastic sheaths act as barriers to the transported fluid/gas and surrounding seawater. The inner carcass resists mainly radially external pressure, while the pressure armour provides reinforcement against internal pressure. As they are wound at a short pitch they do not contribute significantly in carrying either axial or bending loads. The tensile armors are wound at a lay angle of approximately $30^o$ and shall resist tension, torque, bending and the pressure end cap effect. Antifriction tapes are usually used between the steel layers to reduce friction and wear.

Potential failure mechanisms for tensile armours include fatigue and fretting of individual wires and wear of adjacent layers. The wear rate is a function of the interlayer contact pressures between layers, friction coefficient and the degree of slippage.

From a local to global model analysis perspective, the bending behavior is a very important input parameter in the dynamic analysis of the floating production system. Caire (2014) has previously assessed the influence of riser hysteresis on the bend stiffener response. He concluded that the higher the energy dissipated in a loading cycle, the lower will be the

curvature amplitude response and standard deviation at hang-off, which help decreasing the lifetime assessment conservatism in this critical area of the riser.

## 2 FLEXIBLE RISER BENDING BEHAVIOR

The axisymmetric response of those structures has been extensively dealt by many authors in the last years, where it's largely described as linear as long as material nonlinearities are not included. When subjected to bending the response exhibits large non-linearities with an increasing complexity to predict the response, where, one of the reasons is the freedom of helical layers to slide. For small curvatures, the forces in the pipe cross section are smaller than the friction forces and it responds closely to a linear solid rod. When sliding starts to occur between adjacent layers, the stiffness is mainly governed by the plastic layers and the elastic bending contribution from each individual armour tendon, until the gaps between them are closed (contact radius) and the stiffness continuously increase until pipe failure.

There are few commercial softwares available for evaluation of local flexible pipe cross section structural response. BFLEX2010 (2012) is one example, where the pipe can be exposed to pressure, tension and bending loads. As described in the program theory manual, in order to minimize the number of degrees of freedom and to obtain numerical stability, the transverse slip of the tensile armour is neglected, i.e, the tensile armour is assumed to follow a loxodromic surface curve. This may be a reasonable assumption for realistic friction coefficients and the sensitivity of this assumption with regard to predicting the curvature and tensile armour axial stress distribution is considered small. It's additionally assumed that the cross section maintain it's form sufficiently to allow all local bending and torsion effects of the tensile armour to be calculated analytically. Shear stresses between armour tendons and supporting layers only occur as a result of bending and hence axisymmetric strains and bending strains are assumed uncoupled.

In the work by Kraincanic and Kebadze (2001), they have presented an explicit analytical formulation describing the variation of the bending stiffness of a helical layer as a function of curvature, friction coefficient and interlayer pressures from the non-slip to the full slip-bending stiffness. The following assumptions were adopted: i) tendons can slide only along their own axes; ii) contact pressure induced by bending itself is neglected; iii) it has been considered that bending takes place far from the terminations; iv) static and dynamic frictions are equal; v) the radius which adjacent tendons in a layer come into contact is not considered and vi) bending and torsional stiffness of individual tendons are neglected. From their derivation, they arrive at the following relation for the critical curvature at which the slip initiates,

$$K_{cr}^{\min} = \frac{P_1 k_1^{fr} + P_2 k_2^{fr}}{E\,t \sin(\alpha)\cos^2(\alpha)\cos(\theta)} \tag{2.1}$$

where $k_1^{fr}$ and $k_2^{fr}$ are the friction coefficients, $P_1$ and $P_2$ are the contact pressures on the inner and outer surfaces of a tendon, $E$ the young modulus, $t$ the tendon thickness, $\alpha$ the lay angle and $\theta$ the angular position of a tendon cross-section.

The derivation of the bending stiffness in the no-slip range, has been previously described by other authors and is given by,

$$EI_0 = \frac{1}{2} EAR^2 \cos^3(\alpha) n \tag{2.2}$$

where $A$ is the tendon cross section area, $R$ the mean radius of a layer and $n$ the number of tendons in a layer. Figure 2.1 shows a schematic bending moment x curvature relationship for a helical layer. Considering an arbitrary cross section subjected to plane bending, one part of the cross section will be in the slip domain, where another part will still be in the stick domain. According to Kraincanic and Kebadze (2001), when $K \le K_{cr}^{\min}$, there is no sliding of tendons and the stiffness of the layer is at its maximum given by Eq. (2.2). Between A and B there is a transition phase where some parts of the tendons slide and others do not. In the region BC the tendons slide everywhere, and because the strains do not change and are governed entirely by friction, the stiffness of the layer becomes zero.

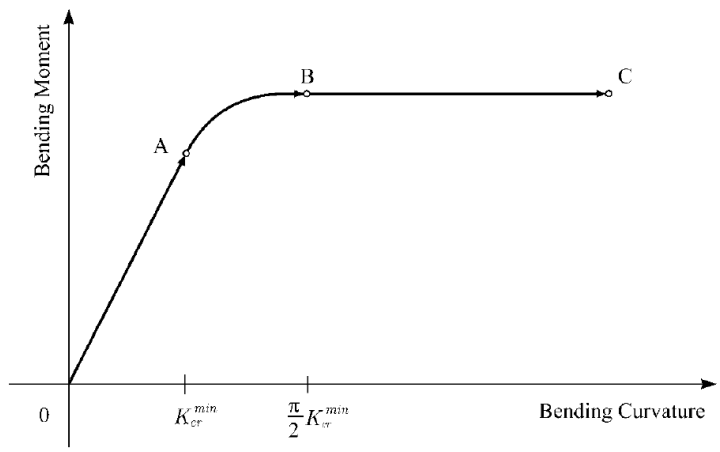


Figure 2.1 – Theoretical bending moment curvature relationship of a helical layer [Kraincanic and Kebadze (2001)]

From Eq. (2.1) it can be concluded that higher internal pressures lead to higher values of critical curvature (later initiation of sliding with bending) and consequently larger hysteresis. The same can be said about the friction factor.

# 3 FINITE ELEMENT MODELING

In order to investigate the uncertainties associated to the bending behavior prediction of flexible risers, a finite element model methodology is proposed and implemented using the general finite element package ABAQUS v6.13. The following sections present the cross-sectional data employed in the case study followed by a description of the model.

## 3.1 Flexible riser local cross section data

Due to lack of public available experimental data, the 2.5" ID flexible pipe cross section published by Witz (1996) has been selected for the case study. The paper presents a comparison between the numerical results of 10 different institutions with the experimental data of a Coflexip flexible riser design. By that time it was clear that more attention should be given to the structural response under combined axial, torsional and bending loading while axisymmetric results agreed reasonably well. Figure 3.1 shows the main components of the riser, where the geometric and material properties of each layer can be found in his work, with the exception of the friction coefficient between layers that is not provided.

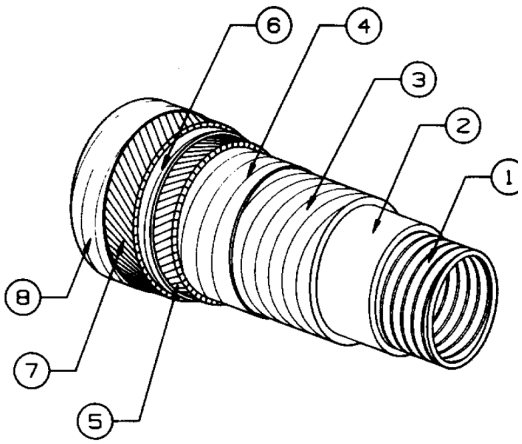


| | |
|---|---|
| 1 | Inner interlocked steel carcass |
| 2 | Pressure plastic sheath |
| 3 | Zeta spiral |
| 4 | Antifriction wrapped plastic ribbon |
| 5 | First tensile armor |
| 6 | Antifriction wrapped plastic ribbon |
| 7 | Second tensile armors |
| 8 | Fabric tape |

Figure 3.1 – Flexible riser cross section

## 3.2 Finite element modeling methodology

The following modeling methodology, proposed by Instituto SINTEF do Brasil, will be hereafter called MARFLEX. Only the tensile armours are currently considered in the model initial version, where the main assumptions are as follows,

- Tendons can slide without any restriction (except for the end termination);
- Axial, bending and torsional stiffness of individual tendons are taken into account;
- Contact pressures induced by bending are intrinsically considered;
- Constant curvature along model length;
- The cylindrical shape of the base surfaces are considered not to change. Radial contract/expansion is currently neglected.

The general purpose finite element software Abaqus (2012) offers two approaches for dynamic analysis: implicit and explicit. According to the user manual, in an implicit dynamic analysis the integration operator matrix must be inverted and a set of nonlinear equilibrium equations must be solved at each time increment. In an explicit dynamic analysis displacements and velocities are calculated in terms of quantities that are known at the beginning of an increment; therefore, the global mass and stiffness matrices need not be formed and inverted, which means that each increment is relatively inexpensive compared to the increments in an implicit integration scheme.

The explicit numerical procedure has been chosen for the selected model as it allows quasi-static analysis for large models with complicated general conditions to be performed.

The two tendons laid in opposite directions are modelled as beams elements allowing for axial, bending and torsional stiffness to be considered. To be able to represent the contact between the support layer and between the tendons itself, a surface element has been used to represent the external face of each tendon. They can transmit only in-plane forces and have no axial, bending or transverse shear stiffness. All their degrees of freedom are tied to the tendon beam elements. This approach has the big advantage of reducing the model degrees of freedom by using beam elements to represent the tendon instead of using more computational demanding solid elements.

The same surface elements are used to represent the base layer of the tendons. It means that a constant gap is kept between the first and second layers of tendons. To achieve a constant curvature when subjected to bending, a very stiff beam is used as the master node surface to be tied to all degrees of freedom of both base surfaces.

For the boundary condition a kinematic coupling constraint is applied to each end of the riser segment. It constrains the motion of the coupling nodes (all the end nodes of each tendon) to the rigid body motion of the corresponding reference node.

The normal contact is modeled with a linear pressure-overclosure relationship. A slope $k$ of the curve is selected and the surfaces transmit contact pressure when the overclosure between them, measured in the normal direction, is greater than zero. For the tangential behavior the Coulomb friction model is employed. As described in the user manual, in the basic form of the Coulomb friction model, two contacting surfaces can carry shear stresses up to a certain magnitude across their interface before they start sliding relative to one another; this state is known as sticking. The Coulomb friction model defines this critical shear stress, $\tau_{crit}$, at which sliding of the surfaces starts as a fraction of the contact pressure, $p$, between the surfaces ($\tau_{crit} = \mu.p$). The stick/slip calculations determine when a point transitions from sticking to slipping or from slipping to sticking. The fraction $\mu$ is known as the coefficient of friction. Figure 3.2 shows 3D the model, where one can observe some of the details described above.

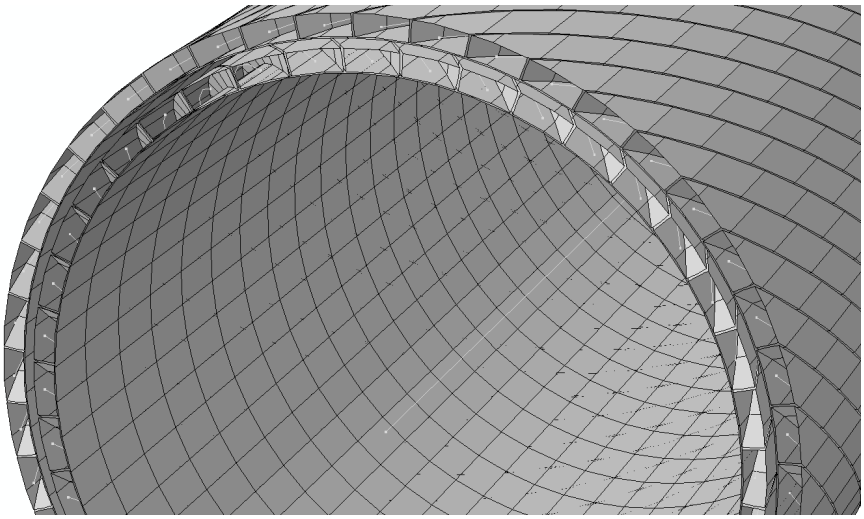

Figure 3.2 – Model details

# 4 CASE STUDY

A case study is presented in this section where the goal was to achieve numerical results compatible with the experimental data obtained with the flexible riser cross sectional data presented by Witz (1996). The numerical analysis and a discussion on the results are presented below.

## 4.1 Numerical analysis and results discussion

For the present case study, the pressure-over closure slope has been set to $k = 1GPa/mm$ and a constant friction coefficient given by $\mu = 0.15$ has been employed in all the simulations.

The model has been constructed considering approximately one pitch length. 40 three dimensional beam elements (B31) have been employed for each tendon, which leads to a total of 3360 elements for both tendon layers. For the surfaces, a three-dimensional, 4-node surface element with reduced integration (SFM3D4R) has been used.

A controlled displacement type of analysis has been carried out, applying an angular displacement in each reference point of the model. For the simulation to be quasi-static and have little inertial effects, the loading rates must be such that the kinectic energy remains small compared to the internal energy throughout the analysis. For the present analysis (full cycle) the time increment was set to $\Delta t = 5.0x10^{-6}\,s$ with a time interval of 4 sec, which required an intensive computational cost. The solution of the full bending cycle has taken approximately 5 hours running the problem with 8 CPUs @ 3.40 GHz.

For the experimental bending test with zero internal pressure, where the pipe is not under any axisymmetric loading, theoretically, there would be no interlayer contact pressures between the layers. From the previously presented equations, it is clear that in the complete absence of interlayer contact pressures, tendons would slide freely at any non-zero curvature and the corresponding stiffness would be the linear full-slip stiffness due to the others layers (plastic mainly). Two numerical experiments have been carried out with the present model. The first

one considered zero pressure, but keeping the friction coefficient, and the second one zero pressure with no friction. Both resulted in irrelevant stiffness from the tendons.

It is a well-known fact that in an actual pipe interlayer pressures always exist due to manufacturing process of layer extrusion. This parameter is an unknown and may vary from layer to layer, which increases the analysis uncertainty.

The application of a pressure directly on the tendons does not necessarily represent the effect of the internal pressure loading. This is due to the order of layers in the pipe. The internal pressure is mainly taken by the pressure layer before it can reach the tendons. In that case, the main contribution for the interlayer contact pressure is due to the end cap effect.

On the other hand, the external pressure acts on the tendons before it reaches the pressure layer. This result in the bending stiffness being more sensitive to variation in external pressure than to internal pressure, which can become an important consideration for deep-water applications.

The methodology adopted here is to; based on the experimental results, select a representative interlayer contact pressure for the numerical analysis. Initially, a series of bending tests have been carried out, applying different values of constant pressure in the tendons. The loading is applied directly in each tendon layer, in the opposite face of the contact with the base surface. As an example, Fig 4.1 illustrates the displacement model results. In Fig. 4.2 one can observe the bending moment x curvature response for the different pressures applied. As expected and according to Eq. (2.1), the higher the pressure applied the higher will be the point where general slip occurs.

In Fig. 4.3 the same response is presented, but now considering the stiffness of the other layers (calculated analytically) and compared to the experimental results for 0 and 300 bar. It can be observed that for the experiment with 300 bar internal pressure, the FEM with an applied pressure of 400 bar in the tendons present a very good correlation. It is important to point out, that end cap effects have not been considered in the case study. The experimental results with internal pressure is also in agreement with the theory previously presented, where the bending stiffness is dominated by the other layers after full-slip takes place in the tendons.

This behavior is not observed experimentally for the case with no internal pressure, where there is an increase in full-slip bending stiffness when compared to the pressurized case. In that case, the closest agreement with the FEM model, is the response with an applied pressure of 200 bar.

Figures 4.4 and 4.5 present the numerical results for the full cycle analysis performed using the selected pressures as explained above. They have shown a very good agreement with the experiments, especially for the case with internal pressure, which indicates that the stick/slip mechanism of the tendons is represented in a proper manner by the proposed model.

A contact radius can be defined as the bending radius at which bending stiffness increases as the contact is achieved between adjacent tendons. A numerical experiment is carried out considering an applied pressure of 100 bar. In the results presented in Fig. 4.6, a smooth transition can be observed for this behavior, where a contact radius can be estimated when a curvature around $k_{CR} = 1.5 m^{-1}$ is overcome. The pressure influence has not been investigated in the present case study.

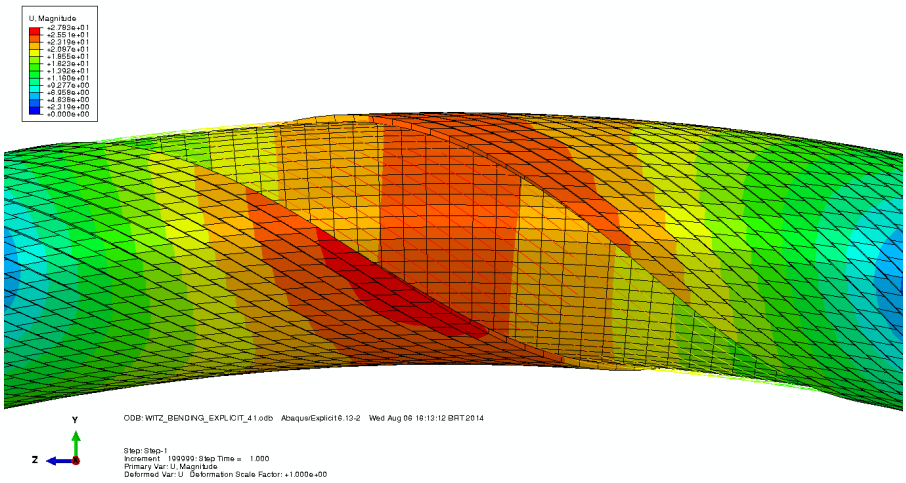


Figure 4.1 – Bending displacement illustrative results

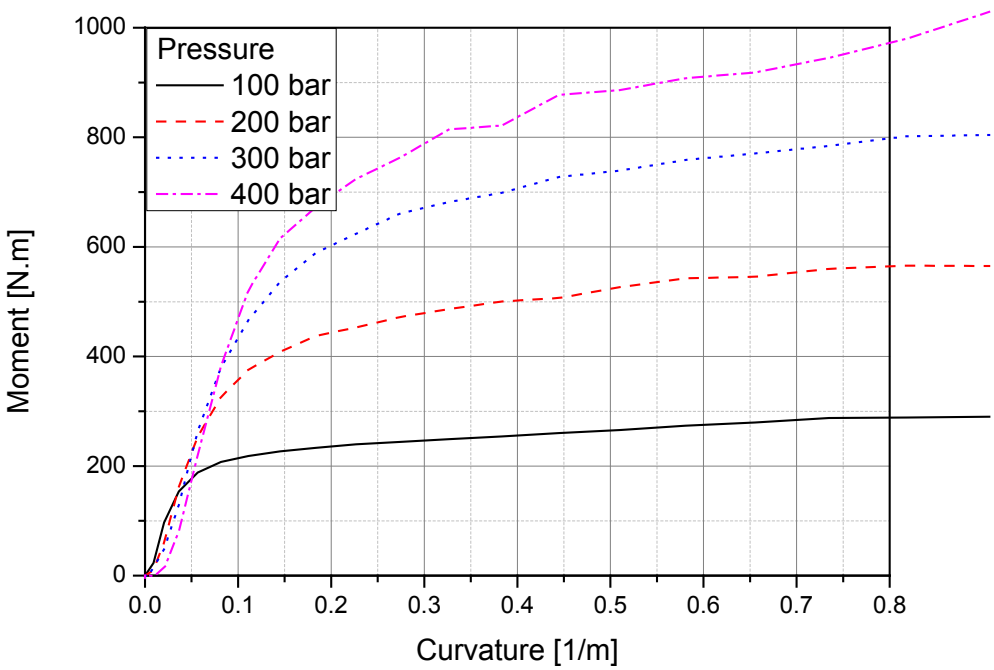


Figure 4.2 – Bending moment x curvature (2 helical layers) for different pressures applied in the tendons

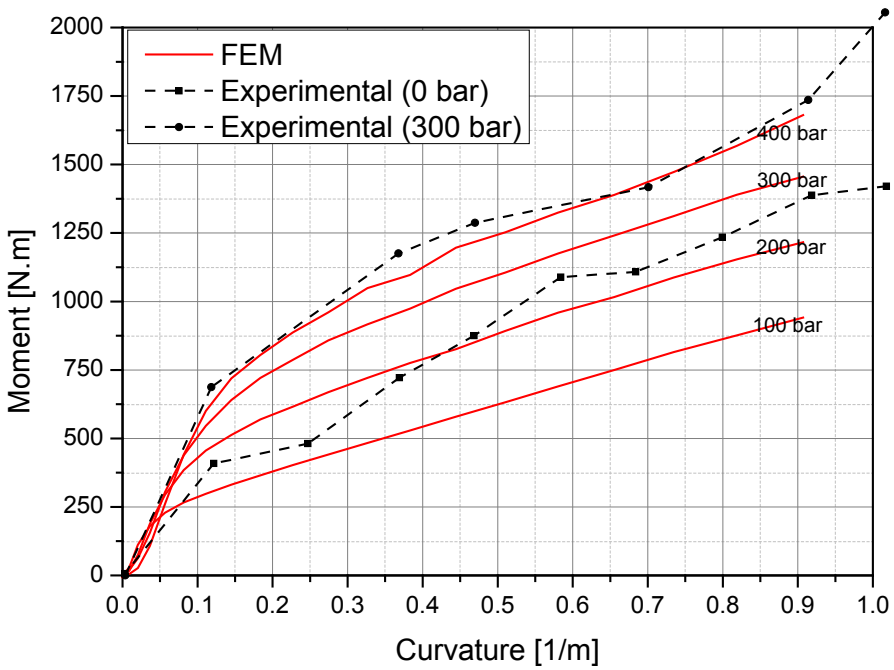


Figure 4.3 – Bending moment x curvature (total) with different pressures applied in the tendons

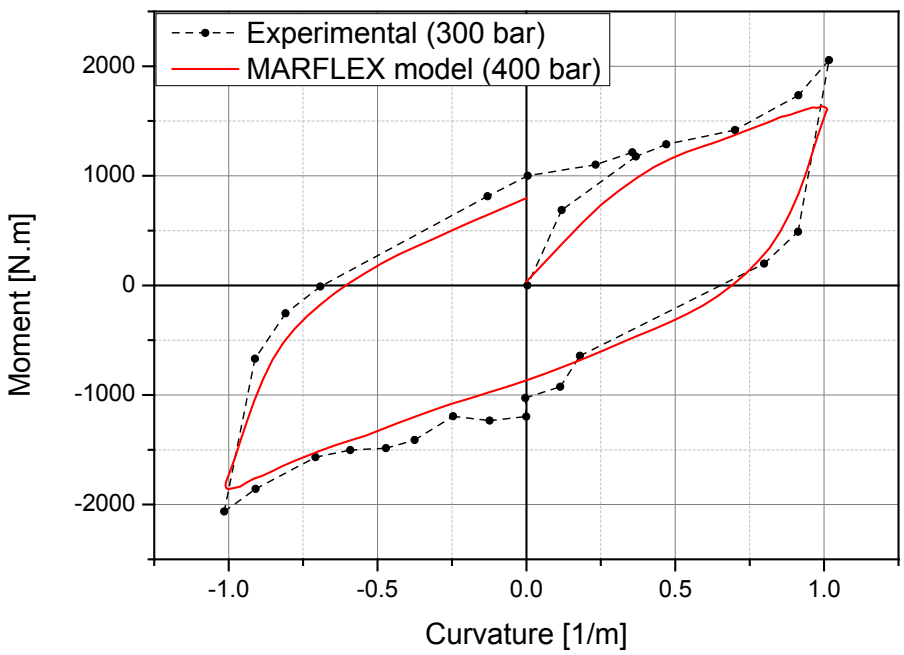


Figure 4.4 – Experimental results (300 bar internal pressure) x MARFLEX model

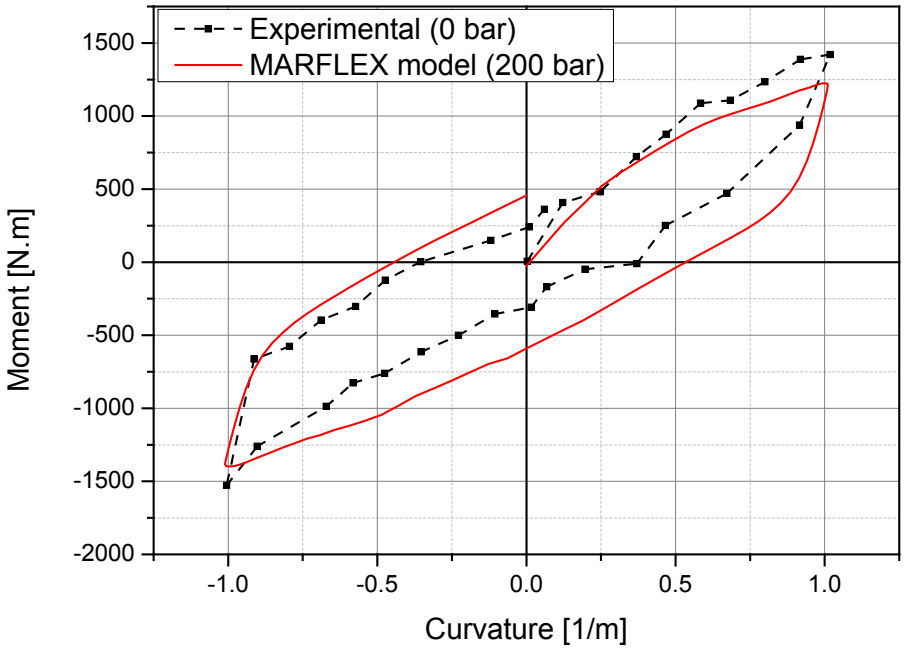


Figure 4.5 – Experimental results (no internal pressure) x MARFLEX model

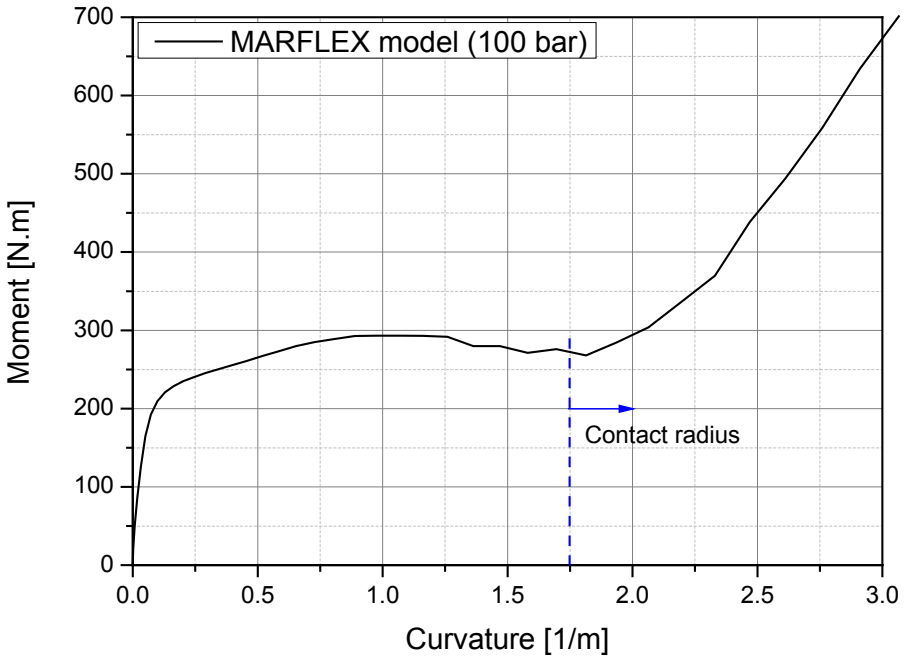


Figure 4.6 – Contact radius estimation

## 4.2 SUMMARY AND CONCLUSIONS

The ever increasing demanding applications in ultra deepwater environment, where a cost effective solution is essential for field development, requires a better understanding of possible failure modes and a decrease on the analysis conservatism.

The axisymmetric response of flexible risers has been extensively dealt by many authors in the last years, being largely described as linear. When subjected to bending, the response exhibits large non-linearities with an increasing complexity to predict the response.

In this paper, a finite element modeling methodology to represent the bending behavior of flexible risers when subjected to pressure and cyclic loading has been presented and compared to available experimental data. The model has been able to effectively capture the stick/slick mechanism observed in the tensile armours response, with the associated energy dissipation due to cyclic loading, and also the contact radius when a stiffness increase is observed due to lateral contact between adjacent layers. The numerical results have shown a very good agreement with the experiments when an adjusted pressure is used for the analysis.

For further improvements, radial contract/expansion can be included for evaluation of axial and torsional response. It might be achieved either by an orthotropic shell with equivalent stiffness or by employing a pressure-overclosure relationship defined in tabular form (and calculated in an independent analysis) individually for each layer. The same can be employed for the anti-bird cage tape. This may allow the numerical calculation of tensile armour lateral and radial instabilities when subjected to compression loads, which is an increasing concern for manufacturers and operators.

## *ACKNOWLEDGEMENTS*

This work has been partially supported by ANP (National Petroleum Agency) and by SINOCHEM do Brasil through the investment clause in Research, Development and Innovation. The authors would also like to acknowledge Petrobras for the work.

## REFERENCES

ABAQUS v6.13, 2012, Program documentation.

BFLEX2010, 2012, Program documentation, SINTEF, Trondheim, Norway.

Saevik, S., 2011. **Theoretical and experimental studies of stresses in flexible pipes**. *Computer and Structures*, vol. 89, pp. 2273-2291.

Caire, M., 2014. **Flexible riser bending hysteresis influence on bend stiffener response**. *33rd International Conference on Ocean, Offshore and Arctic Engineering*, San Francisco, California, USA, OMAE2014-23151.

Witz, J.A., Tan, Z., 1992, **On the flexural structural behavior of flexible pipes, umbilicals and marine cables**. *Marine Structures*, vol. 5, pp. 229-249.

Kraincanic, I., Kebadze, E., 2001, **Slip initiation and progression in helical armouring layers of unbounded flexible pipes and its effect on pipe bending behavior**. *Journal of Stain Analysis*, vol. 36, n. 3, pp. 265-275.

Witz, J.A., 1996, **A case study in the cross-section analysis of flexible risers**. *Marine Structures*, vol. 9, pp.885-904.